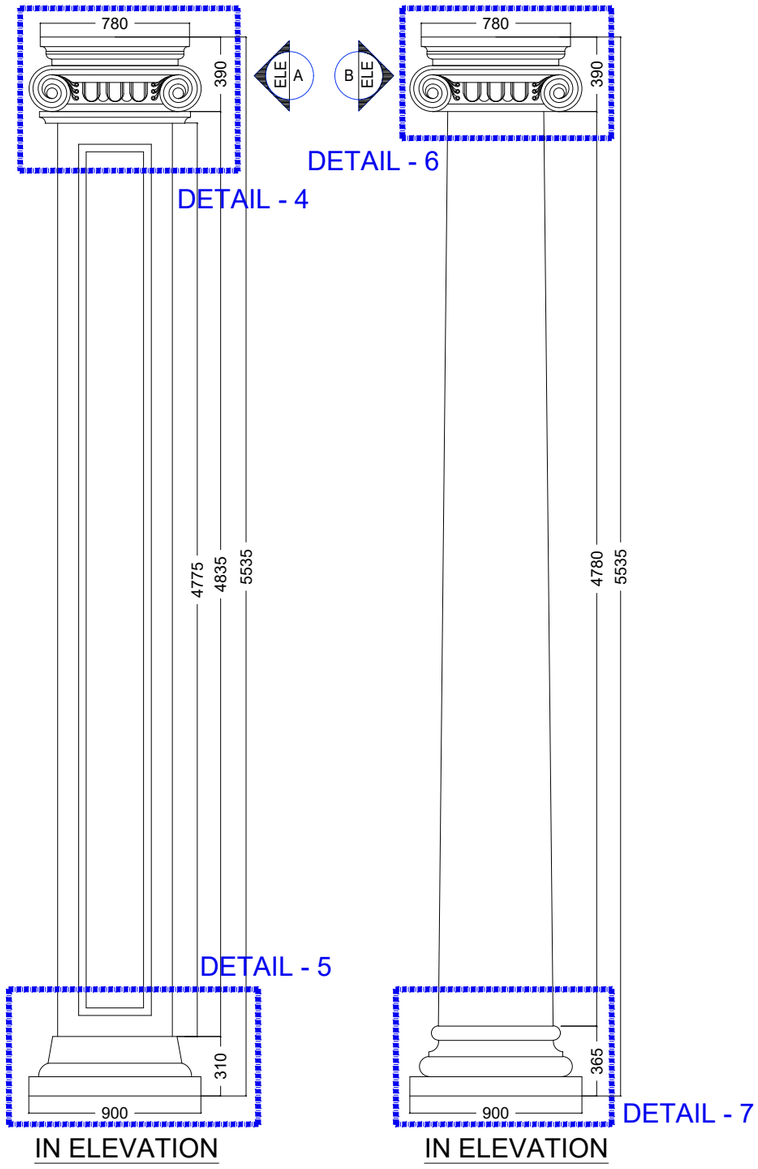

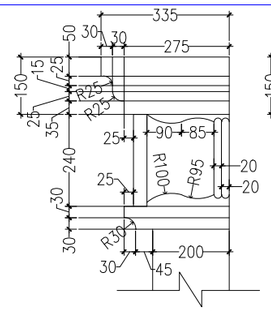

SIDE ELEVATION - A
(PIER CAPITAL)

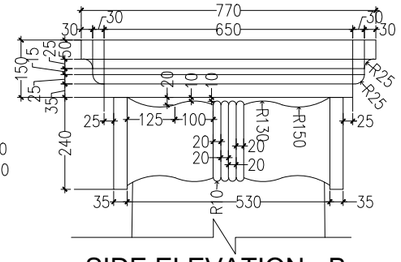

SIDE ELEVATION - B
(COLUMN CAPITAL)
CIRCULAR COLUMN

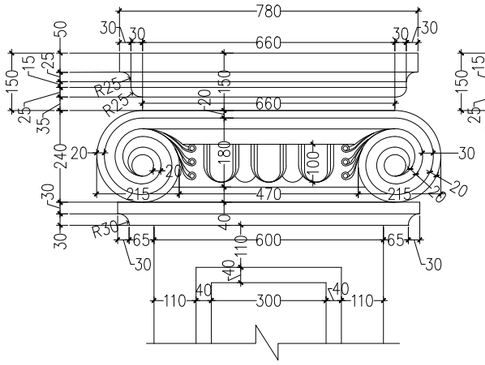

DETAIL - 4

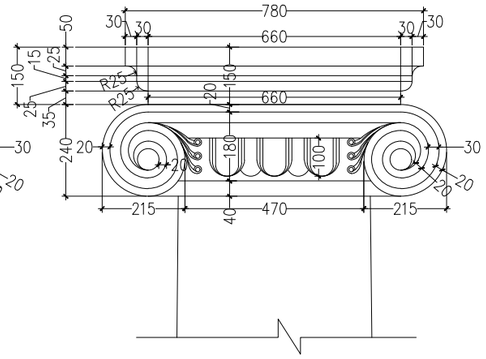

DETAIL - 6

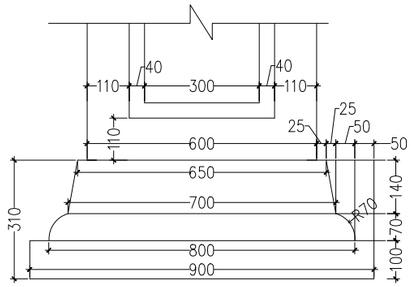

DETAIL - 5

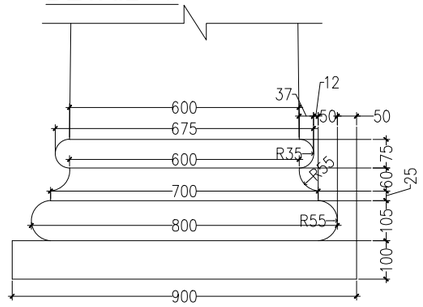

DETAIL - 7

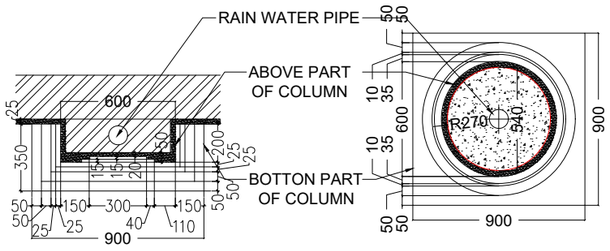

IN PLAN

IN PLAN

NOTES:
1. THIS DRAWING IS NOT TO BE SCALED. ONLY WRITTEN DIMENSIONS ARE TO BE FOLLOWED.
2. ALL DIMENSION SHALL BE CHECKED AT SITE BEFORE COMMENCEMENT OF WORK.
3. ANY DISCREPANCY MUST BE BROUGHT IN THE NOTICE OF ARCHITECT IMMEDIATELY.
4. THIS DWG. SHALL BE READ IN CONJUNCTION WITH STRUCTURE AND OTHER SERVICES DWG.

S.NO.	DATE	REMARK
R1	11.09.25	BALCONY DEPTH INCREASE D AS MENTIONED

REVISIONS-:

OMAXE ARCH. PLANNING DEPT.
ADVANCE COPY | TENDER COPY | GOOD FOR CONSTRUCTION
DATE | SIGN

DATE- January 20, 2026

OMAXE
TURNING DREAMS INTO REALITY

PROJECT TITLE-:
TOWER E, AANANDA
PRAYAGRAJ

DRAWING TITLE-:
ENTRANCE PORCH
DETAILS

SCALE-NTS

DRAWING NO.
AANANDA/TOWER E/402